SEER TECHNOLOGY

Data you can bet your life on

Port Storage Facility
Continuous Air Monitoring

Methyl Bromide (CH_3Br)

CAS Number 74-83-9

Table of Contents

Developed and Presented by:

Gary Bodily, Chief Technology Officer
Jed Bodily, Chief Knowledge Officer
Bob Lutnicki, Vice President Business Development

SEER Technology
2861 Parleys Way,
Salt Lake City, Utah 84109

SEER TECHNOLOGY

Data you can bet your life on

Key Solution Details

- The uninterrupted flow of fruit and produce cargo from docked ships through a port's services to distribution is vital to achieving its financial objectives.
- USDA regulations require on-site Methyl Bromide fumigation of fruit and produce cargos. New manufacturer labeling for Time Weighted Average (TWA) of Methyl Bromide exposure for workers presents uncertainty regarding future OSHA regulations and can jeopardize daily port operations.
- A continuous air monitoring system for Methyl Bromide has been identified by as a the preferred solution for protecting workers from non-permissible exposure limits resulting from packaging off-gassing in confined space chiller boxes.
- A 5 parts per million (ppm) concentration has been identified by the manufacturer as the TWA for Methyl Bromide.
- The AccuSense Chemical Recognition System from SEER Technology supports the precise 5 ppm detection sensitivity levels and the continuous monitoring capability required for a successful Port chiller air monitoring system. The AccuSense instrument can detect, identify and quantify multiple airborne chemicals providing analysis results in a timely, precise and documented format.
- SEER engineers have conducted an on-site study of a major port to determine the best chiller air monitoring solution. Based on this research SEER engineers have designed a successful AccuSense solution and identified a provider of components critical to the deployment of this solution.

I. Port Business Model

Ports generate revenues from tariffs for a full range of terminal services such as: wharfage, dockage, back hauling, heavy lift, handling and storage.

Most ports have dock side, cold storage facilities including temperature controlled warehouses including chilled and freezer storage space; some may have controlled atmosphere capability.

This cold storage capacity combined with a central geographic location for distribution to the large population centers make a port a primary point for off loadings of fruit, produce and hard goods.

Shipments of fruit and produce to the United Sates are governed by Marketing Orders issued by the United States Department of Agriculture. To protect domestic growers Marketing Orders limit shipments of fruit and produce to domestic off-season periods.

The resulting short shipping season represents a critical revenue generation period. The uninterrupted flow of product from docked ships through port services to distribution is vital to achieving financial objectives.

The U.S. Department of Agriculture's Animal and Plant Health Inspection Service (APHIS) mandates that imported fruit and produce be treated according to Treatment Schedule T101 *Methyl Bromide Fumigation*. The successful management of the Methyl Bromide (MB) fumigation process to US Federal government regulations is a key component of the successful, continuous flow of fruit and produce through the port.

Hard goods such as timber and steel coiling may also require Methyl Bromide fumigation upon entry into the United States.

II. The Management Plan for the Handling of the Fumigant Methyl Bromide

Fumigation Process

Fumigation: USDA regulations require on-site fumigation of grapes upon unloading from the shipping vessel.

Palletized cartons of grapes are moved into a warehouse and placed in position under one of multiple fumigation tarpaulins.

Tarpaulins are dropped over palletized grapes and secured with sand snakes. Temperature is maintained at 42°, or above, to prevent pests from moving to a dormant state.

Outside contractor executes fumigation procedure according to USDA protocols. Six hundred pounds of Methyl Bromide are pumped into each tent to create a fumigation level of 1,200 ppm. Fumigation event extends overnight for a regulated period of time.

In the morning fumigation tarpaulins are aerated and tested for MB concentrations. The tarpaulins are removed and pallets are moved from Warehouse F to cold storage warehouses.

Methyl Bromide Risks

Humane exposure to Methyl Bromide at low concentrations over time may lead to respiratory, kidney, and neurological effects.

The Environmental Protection Agency and the Department of Labor (OSHA) are US federal agencies that monitor and regulate Methyl Bromide.

The manufacturer of Methyl Bromide has changed product labeling to reflect a 5 ppm TWA. This change places present OSHA regulation permissible exposure limits (PEL) in question and will likely lead to new regulations which the Port will be responsible for meeting.

The former OSHA PEL for Methyl Bromide was a 20-ppm ceiling with a skin notation, while the ACGIH limit is 5 ppm as an 8-hour TWA, with a skin notation. NIOSH recommends that the REL for this substance be set at the lowest feasible level. NIOSH proposed, and the final rule established, a permissible exposure limit of 5 ppm (8-hour TWA), with a skin notation, for Methyl Bromide.

Manufacturer Material Safety Data Sheets (MSDS) list 5 ppm as the PEL and it is anticipated that the 5 ppm PEL will be the exposures benchmark going forward.

The 5ppm benchmark is the objective that the Port must achieve to meet its obligation to its stake holders.

Methyl Bromide Risk Mitigation

Safety for the Methyl Bromide program means managing maximum Methyl Bromide Time Weighted Average exposures for Port personnel to not exceed the 5ppm expected NIOSH TWA.

The Successful Methyl Bromide Monitoring System

A successful monitoring system will meet the following objectives:

1. The capability to monitoring MB concentration levels to sub 5 ppm levels in an immediate time or close to real time basis.
2. The capability to perform continuous air monitoring in all cooler boxes on a 24/7 basis with a minimum of two (2) samples every thirty (30) minutes to provide timely information to guide exposure avoidance procedures
3. The capability to interfaces to cooler box air management systems in order to automatically evacuate cooler box atmosphere when MB concentrations exceed target levels
4. The capability to record historical records of all monitoring activities and operational statistics

A successful monitoring system will solve the following engineering challenges:

1. The development and installation of a precise and robust remote manifold system to manage the extraction of cooler box air samples to a central point for analysis and presentation of findings.
2. The design and development of a air sample line system to move air samples from the point of collection to the point of measurement and overcome the following challenges:

a. The tendency of air sample molecules to **“stick”** to air line walls inhibiting the flow to analysis point.

b. Methyl Bromide **condensation** on air line walls resulting from the boiling point for Methyl Bromide being 38.5 F which is close to the ambient temperature of 32 F in the cooler boxes.

c. Maintaining Methyl Bromide in **vapor** form as it travels from sample point to analysis point.

d. Maintaining a **flow** volume that is consistent with the air sample volume necessary for timely and precise analysis

e. Preventing potential **contamination** points in mechanical systems and sampling conduits that can adulterate analysis readings.

III. The SEER AccuSense® Chemical Recognition System
Methyl Bromide Monitoring Solution

To meet the defined objectives of a successful Methyl Bromide monitoring system, the SEER AccuSense Solution focuses on three tracks:

1. Deployment of the AccuSense Chemical Recognition System to maximize precise detection and analysis of Methyl Bromide, to monitor additional TIC's and to eliminate consumables from the continuous air monitoring process
2. Sampling Valve Manifold redesign to prevent contamination during monitoring
3. Upgrade of the air sampling line architecture and fabrication to support required sample flow to the monitoring station.

Track #1- AccuSense Chemical Recognition System

The **AccuSense** instrument represents the first successful transfer of precise, laboratory based chemical detection technology to a field utility device. It was designed to fulfill the mission of continuous air monitoring applications, such as the Methyl Bromide monitoring application, by making precise field chemical analysis information available to decision makers.

AccuSense is a hand deployed, Dual Hyphenated Gas Chromatograph that can Detect, Identify and Quantify multiple Toxic Industrial Chemical (TIC) gases, at one time, in real time (3 minute sample times) and communicate analysis results to a remote PC monitor for display of quantification results.

Key AccuSense design attributes that will impact the success of the Port MB continuous air monitoring application are:

1. Dual Hyphenated Gas Chromatograph technology the implements two dimensions of separation criteria resulting in the absolute separation of chemical signatures to maximize identification and minimize environmental confusers and false results.
2. Proprietary detector technology that records 180,000 data points to precisely profile the separated chemical signature.

3. A database of High Definition AccuSense Chemical Signatures to precisely identify and quantify the detected chemical compound.

4. SEERID Decision Software that present analysis quantification data on a remote PC monitor that will also serve as the interface point to Port air movement system controls

5. A historical data base record of all AccuSense analysis results and the operation of the instrument to specification.

6. AccuSense requires no consumables such elute gas or electro chemical

agents <u>Track #2 AccuSense to Air Sample Line Manifold Design</u>

SEER recommends the following design criteria for the system manifold to eliminate potential **contamination** of the system:

1. Eliminate filters in the analytical path. Filters prior to a detection point can result in errors resulting from the chemical being absorbed into the filter. This can result in a reading that is lower than the actual concentration present in the cooler box. The chemical can also be released from the filter material at a later time which will result in a false indication of chemical concentration.

2. Deploy a high capacity pump that is chemically resistant. The AccuSense needs to sample from a point that is at atmospheric pressure. Sampling from the exhaust of the pump will give accurate results while keeping costs low.

<u>Track #3 Air Sample Lines</u>

1. It is important to use stainless steel tubing. Stainless steel is one of the most chemically resistant material available and will minimize **“stickiness”** while remaining cost effective.

2. Heat tracing the line is recommended to reduce the amount of **condensation** on the walls of the tubing. Methyl Bromide has a boiling point of 38.5 F which is close to the ambient temperature of 32 F in refrigerated compartments.

3. Heat traced insulated line will provide heating to keep the chemical in a **vapor form** throughout the sample lines. A 1/2 inch stainless steel conduit with an integrated heat trace line appears to be the most cost effective solution.

4. Maintain consistent air sample **flow** by designing the architecture of the monitoring pod (manifold/analysis station/ sampling conduit) so that the distance from the sample point to the analysis point does not exceed 250 feet for any one sample line in the system. This will assure that a sample taken through the sample line will have the time to stabilize at a concentration that is representative of the conditions in the cooler box.

5. Limiting air sample line length to a maximum of 250 feet will result in a stabilized sample that is within the 3 minute cycle time of the AccuSense instrument.

6. Deploy no more than 4 sample points per AccuSense instrument. With the 3 minute cycle, sampling each of 4 locations will take 12 minutes. In this configuration, each point will be sampled twice in a thirty (30) minute time frame providing timely, high value information to support exposure avoidance procedures

<u>AccuSense Solution Building Blocks</u>

A *Monitor Pod* serves as the base building block for the Port Methyl Bromide AccuSense Continuous Air Monitoring solution. The Monitor Pod can be duplicated for deployment across all Port chiller box warehouses. It is flexible in design and may be modified to maximize results. It is scalable so that the number of detection points may be expanded to meet developing regulation standards.

A Monitor Pod is composed of the following two modules:

1. The Detection Module
    a. AccuSense instrument
    b. Switching manifold system
    c. Air sample line connectivity to four (4) sample points
    d. Ethernet connectivity to Analysis Module

2. The Line Module
    a. Stainless steel tubing
    b. Each line is heat traced
    c. 250 ‘ Maximum length from sample point to Detection Module

The Monitor Pod is connected to a centralized *Analysis Station* that includes:

1. Panasonic Toughbook Lap Top PC hosting SEER**ID** Decision Software
2. Ethernet connectivity to Detection Module

Recommended Solution Components:

1. **Sampling Line:** Self Limiting, 150A° F+ (apx) operation, 1/2” Stainless Steel tube. 120/240 VAC 9advise), appx 4 VA/ft cascading design to connect with other ASE lines.

2. **Manifold with Selection Valves:** 4 in/ 1 out, heated valve array. 24 VDC coils, 120/240 VAC heater. Integrated temperature controller, 24 VDC power supply and switching circuit (dry contacts) to select valve position. Integrated, non-heated valves to main blower bypass. Includes non heated valves for blower bypass.

3. **Analytic Path Sample Pump:** Heated Mini-Pump –LPM, 120 VAC, 50/60 hz. Self limiting to appx 150 + F. Designed to interface with ASE equipment.

4. **Non Analytic Path Sampling Pump:** Unheated COTS blower

5. **AccuSense Chemical Recognition System:** Dual Hyphenated Gas Chromatograph with Thermal Detector for TIC, AC 85-250 V/Li-Ion Rechargeable batteries, Operating range -20C to 50C, 17X11X4.5 in, 25 lbs in field case. Ethernet RJ45 10/100 Base- T, wireless option

6. **SEERID Decision Software:** Panasonic Tough book based AccuSense Hi Def Signature DB, Graphical User Interface, compound identification, quantification to low PPM. Repeatable GUI display. Integrated selection valve manifold management.

Monitor Pod and Analysis Station

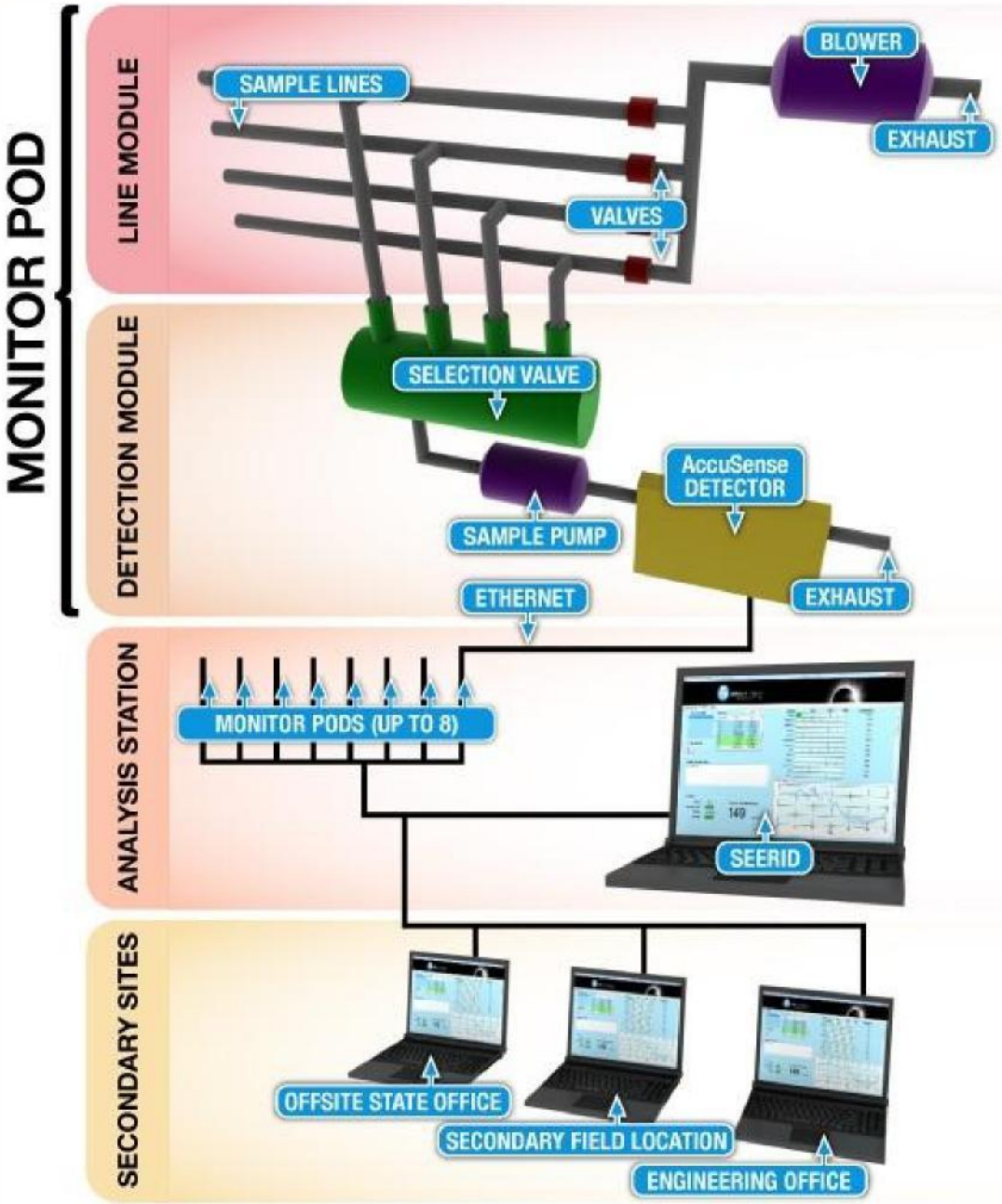

IV. Three Options for AccuSense Continuous Methyl Bromide Monitoring

Option 1 – Direct Detect/Protect/Remediate Data Solution

Description: A One to One to One solution, one (1) AccuSense, to one (1) sample line, to one (1) chiller box solution that maximizes timeliness of results.

Benefit: Three minute sampling provides timely readings for decision making

Consideration: One sample point may not cover observable concentration variances at different areas of the chiller.

Deployment: One Monitor Pod assigned to each chiller box implementing one AccuSense unit connected to one sample line, no manifold, Ethernet connectivity to an Analysis Station.

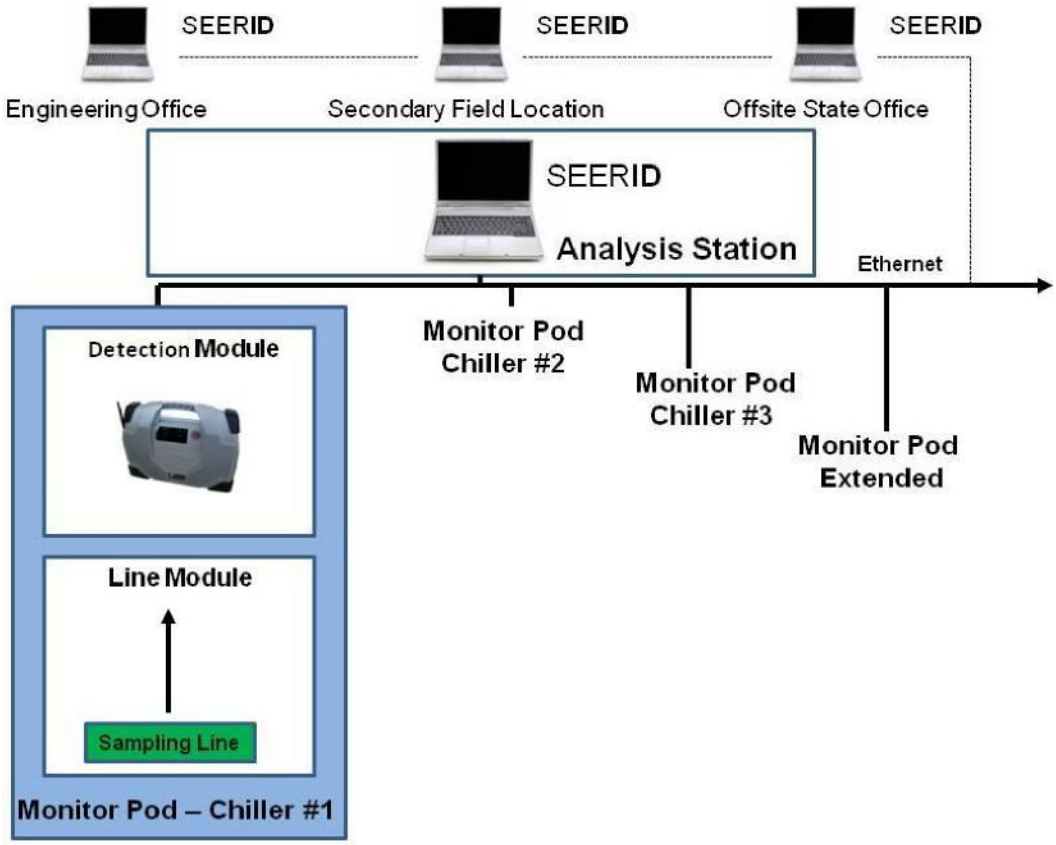

Option 2 – Optimum Detect/Protect/Remediate Data Solution

Description: One to Four to One - A One (1) AccuSense to four (4) sampling lines to One (1) chiller box solution that maximizes area sampled within chiller box.

Benefit: Up to four sampling points stationed at different locations in a chiller supports detection of concentration variances related to chiller loading patterns.

Consideration: Sampling time progression through sample points adds cumulative time impact (up to 12 minutes) to analysis results for any given sample point.

Deployment: One Monitor Pod assigned to each cooler box implementing four (4) sample points with Ethernet connectivity to an Analysis Station.

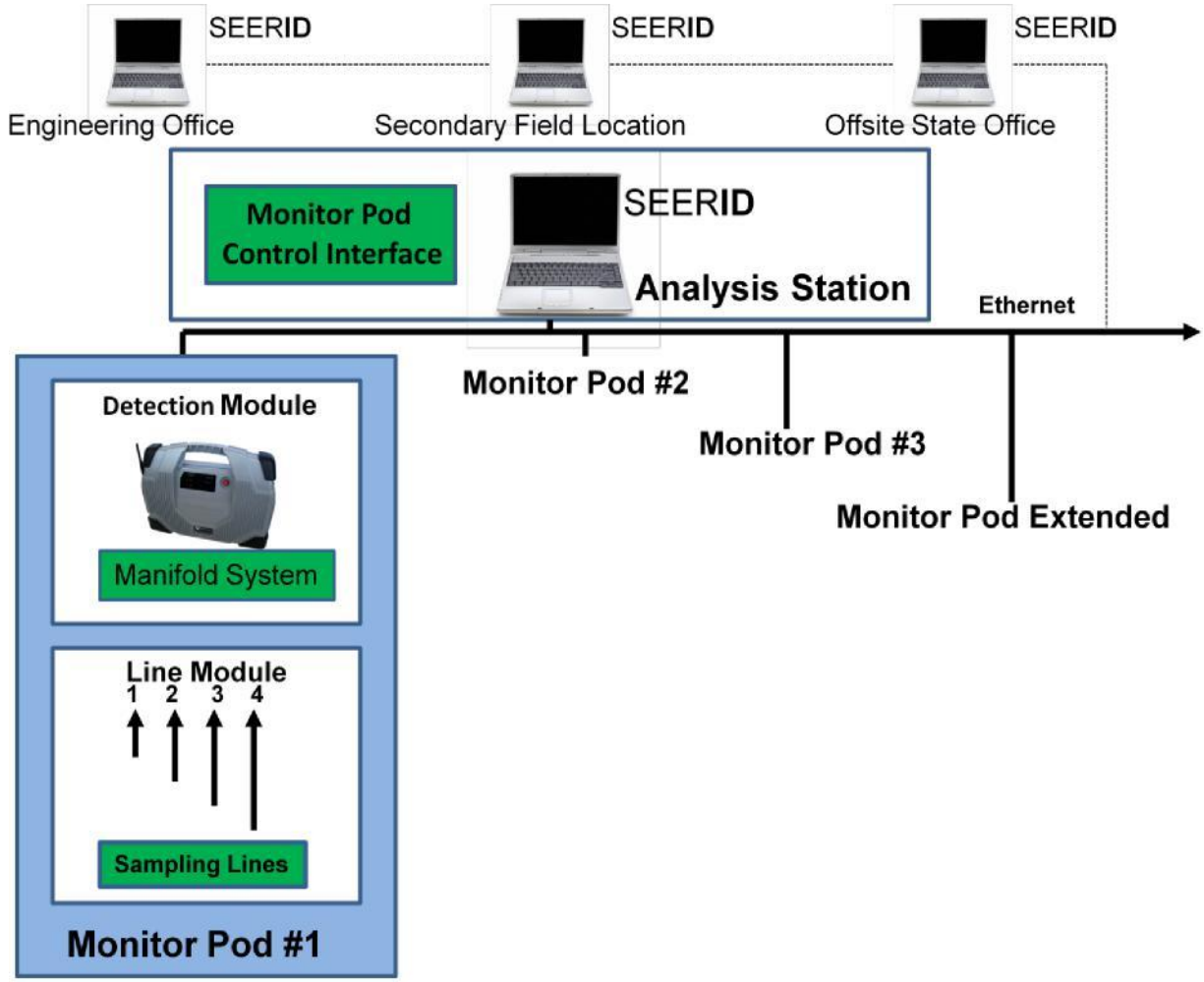

Option 3 – Leveraged Detect/Protect/Remediate Solution

Description: One to Four to Four – A One (1) AccuSense, to four (4) sampling lines, to Four (4) Chiller boxes solution that down scales AccuSense deployment.

Benefit: Provides regulation sensitivity and precision, allows for up scaling to multi sample point per cooler box.

Consideration: Sampling time progression through sample points adds cumulative time impact (up to 12 minutes) to analysis results for any given sample point.

Deployment: One Monitor Pod assigned to four (4) cooler boxes implementing one (1) sample point in each cooler, Ethernet connectivity to an Analysis station.

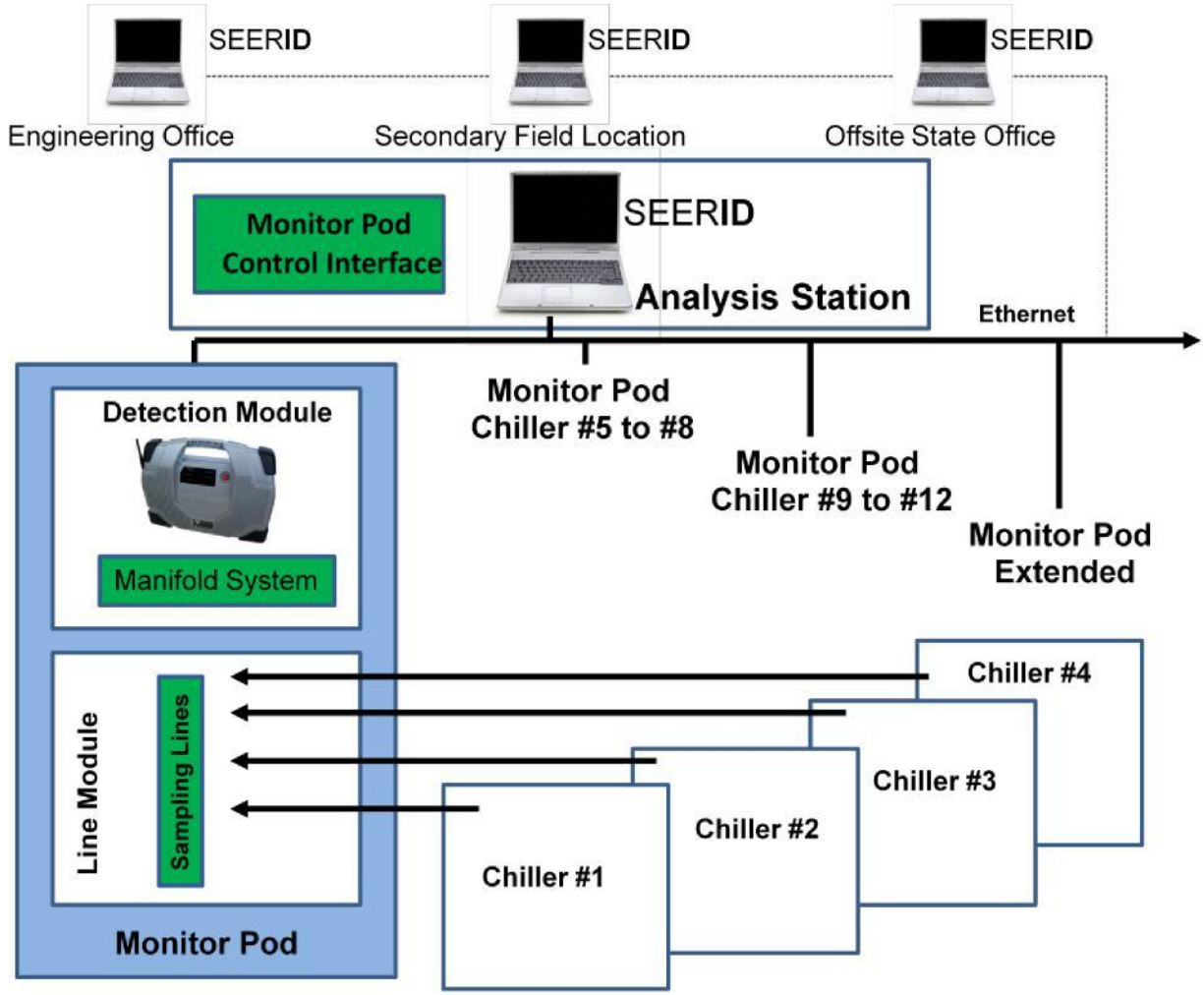

V. Solution Cost

Cost Elements

There are four cost elements, or pricing building blocks, used in building pricing for a SEER proposed Methyl Bromide Continuous Monitoring solution.

1. **Solution Component Pricing:** Pricing for the individual components used to build Methyl Bromide continuous monitoring solution.

2. **AccuSense Mobile Point Detector:** The SEER application review identified a need for the capability to monitor spot locations in a chiller box. Maintenance crews and other personnel may be required to spend time exposed to chiller atmosphere at floor level where Methyl Bromide concentrations would be highest. SEER recommends one (1) AccuSense instrument with supporting laptop PC hosting SEERID Decision software to be assigned to each warehouse.

3. **Installation:** To provide a cost building block the installation cost is defined as the cost to install one (1) Monitor Pod with four (4) sample lines. It is based on two (2) technicians installing 1,000' of sample lines in 72 man hours of work. Travel and lodging costs must be considered.

4. **SEER Technology Project Management & AccuSense Deployment:** SEER will be responsible for installing the Detection Module in each Monitor Pod and the Analysis Station. SEER will oversee the successful deployment of the solution including final testing and evaluation. Costs for the SEER Project Management service include travel, hotel, and daily per diem expense reimbursement.

Note: Maintenance and Warranty - The AccuSense Chemical Recognition System comes with a Five Year Warranty that warrants new products will be free from defects in workmanship and materials, under normal use, for five (5) years from date of original purchase.